THIS DRAWING IS UNPUBLISHED. RELEASED FOR PUBLICATION 20
© COPYRIGHT 20 BY - ALL RIGHTS RESERVED.

LOC	DIST
CM	00

REVISIONS

P	LTR	DESCRIPTION	DATE	DWN	APVD
	G	REVISED PER ECO-15-003291	27JULY15	SC	DZ

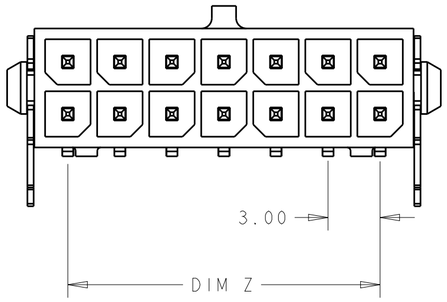

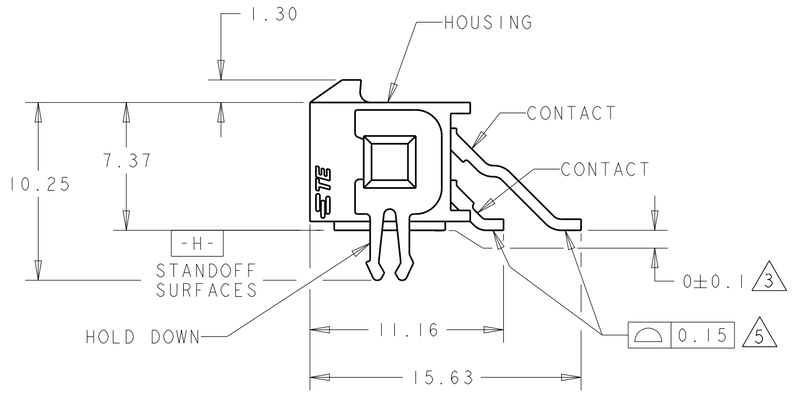

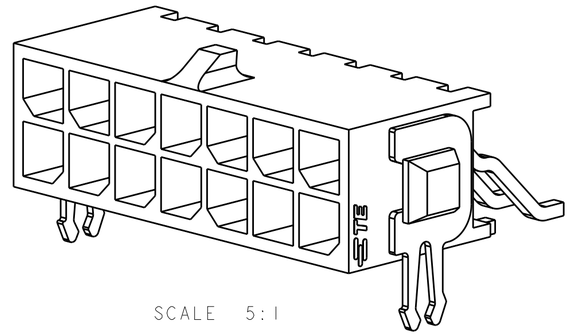

SCALE 5:1

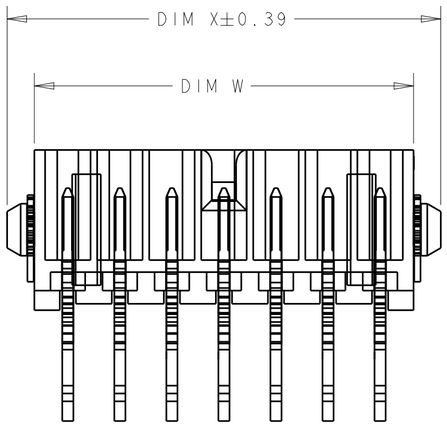

1 MATERIAL;
CONTACTS - BRASS.
HOUSING - UL 94V-0 RATED HIGH TEMP NYLON, COLOR; BLACK.
HOLD DOWNS - PHOSPHOR BRONZE.

2 FINISH;
CONTACTS - 2.54µm MINIMUM TIN-LEAD OVER 1.27µm MINIMUM NICKEL.
HOLD DOWNS - 2.54µm TIN LEAD.

3 DIMENSION APPLIES TO SOLDERTAIL SURFACES AND STANDOFF SURFACES.

4 RECOMMENDED PC BOARD THICKNESS OF 1.57.

5 ALL SOLDERTAILS.

6 FINISH;
CONTACTS - 2.54µm MINIMUM MATTE TIN OVER 1.27µm MINIMUM NICKEL.

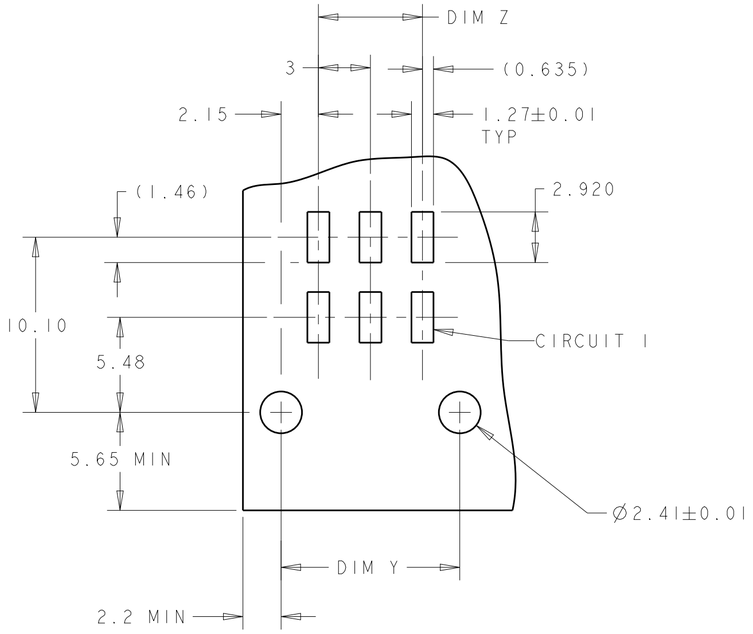

RECOMMENDED PCB LAYOUT (COMPONENT SIDE) 4

6	36.86	37.30	33.00	40.00	24	5-794624-4
	33.86	34.30	30.00	37.00	22	5-794624-2
	30.86	31.30	27.00	34.00	20	5-794624-0
	27.86	28.30	24.00	31.00	18	4-794624-8
	24.86	25.30	21.00	28.00	16	4-794624-6
	21.86	22.30	18.00	25.00	14	4-794624-4
	18.86	19.30	15.00	22.00	12	4-794624-2
	15.86	16.30	12.00	19.00	10	4-794624-0
	12.86	13.30	9.00	16.00	8	3-794624-8
	9.86	10.30	6.00	13.00	6	3-794624-6
	6.86	7.30	3.00	10.00	4	3-794624-4
	3.86	4.30	-	7.00	2	3-794624-2
2	36.86	37.30	33.00	40.00	24	2-794624-4
	33.86	34.30	30.00	37.00	22	2-794624-2
	30.86	31.30	27.00	34.00	20	2-794624-0
	27.86	28.30	24.00	31.00	18	1-794624-8
	24.86	25.30	21.00	28.00	16	1-794624-6
	21.86	22.30	18.00	25.00	14	1-794624-4
	18.86	19.30	15.00	22.00	12	1-794624-2
	15.86	16.30	12.00	19.00	10	1-794624-0
	12.86	13.30	9.00	16.00	8	794624-8
	9.86	10.30	6.00	13.00	6	794624-6
	6.86	7.30	3.00	10.00	4	794624-4
	3.86	4.30	-	7.00	2	794624-2
FINISH	DIM W	DIM Y	DIM Z	DIM X	NO. OF POSN.	ASSEMBLY

794624

METRIC

THIS DRAWING IS A CONTROLLED DOCUMENT.

DIMENSIONS: mm

TOLERANCES UNLESS OTHERWISE SPECIFIED:
0 PLC ±-
1 PLC ±-
2 PLC ±0.13
3 PLC ±-
4 PLC ±-
ANGLES ±-

MATERIAL 1

FINISH SEE TABLE

DWN 23-MAR-2005 S. HOOVER
CHK 23-MAR-2005 C. JONES
APVD 23-MAR-2005 C. JONES
PRODUCT SPEC -
APPLICATION SPEC -
WEIGHT -

TE Connectivity

NAME SURFACE MOUNT, RIGHT ANGLE, MECH. HOLD DOWN, ASSEMBLY, TIN HEADER, DUAL ROW, MICRO MATE-N-LOK (TM)

SIZE A2 | CAGE CODE 00779 | DRAWING NO C-794624 | RESTRICTED TO -

CUSTOMER DRAWING | SCALE 4:1 | SHEET 1 OF 1 | REV G

1471-9 (3/11)